Woodsmith

URL: https://www.woodsmith.com/article/cordless-drill-charging-station/

Free plan: Cordless Drill Charging Station

By: John Doyle

Want to keep your cordless drill and a freshly charged battery in an easy-to-grab spot? Spend a few short hours in the shop to build the wall-mounted charging station you see here.

Whether it's drilling holes or driving screws, my cordless drill is one of the most-used tools in my shop. As such, I wanted to make sure it'd always be in an easy-to-grab location, which is why I whipped up this wall-mounted station.

The station is made of plywood and joined with tongues and grooves. The middle shelf features two cutouts for my drill and driver. The lower shelf is narrow to allow room for the drill to hang down, and it works great for holding my tape measure, rules, and pencils. At the top, the upper shelf holds the charger to keep the batteries topped off (with a hole in the side to feed the cord through). I also decided to keep a box of my most commonly used woodscrews up there to save myself the hassle of rifling through the screw drawer every time.

Drill Charging Station Plans

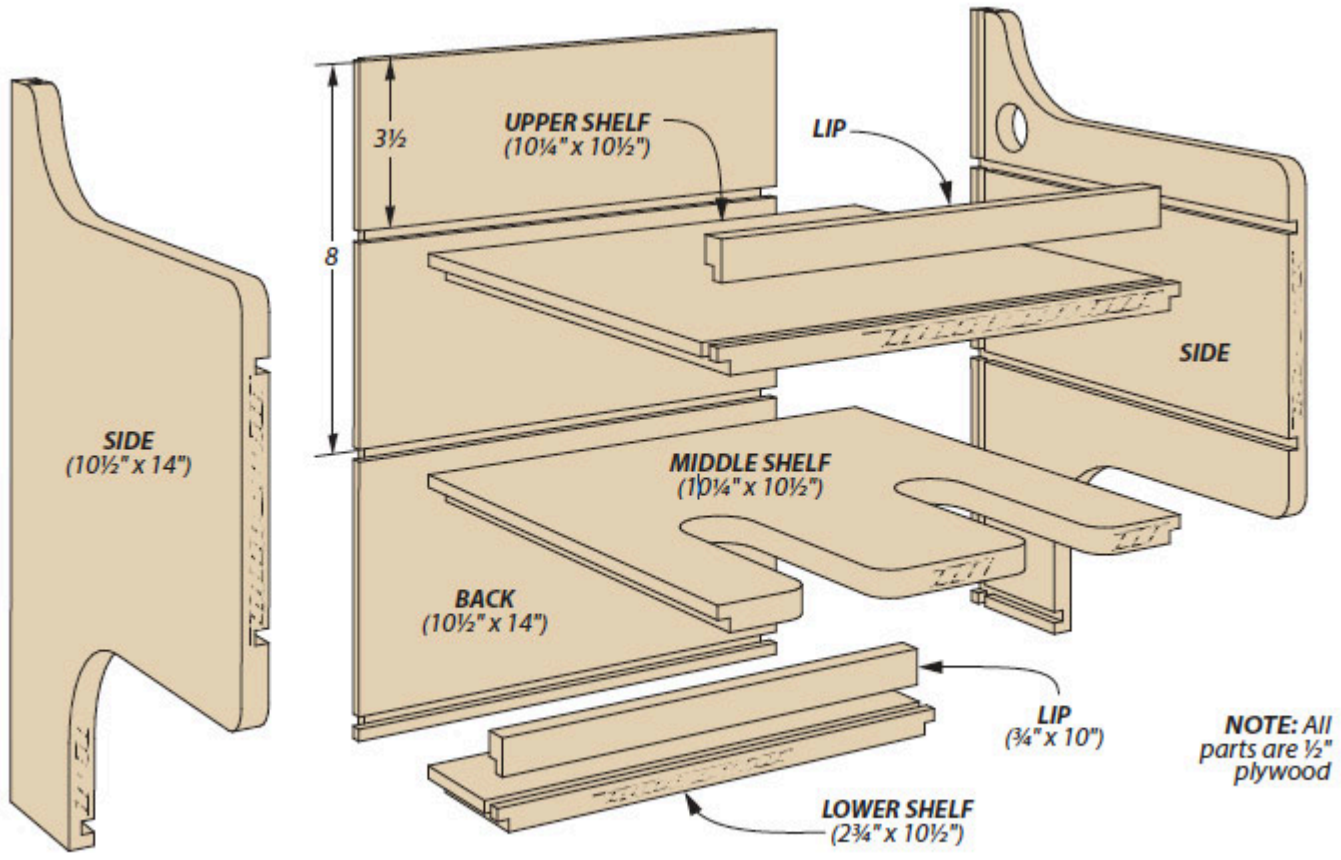

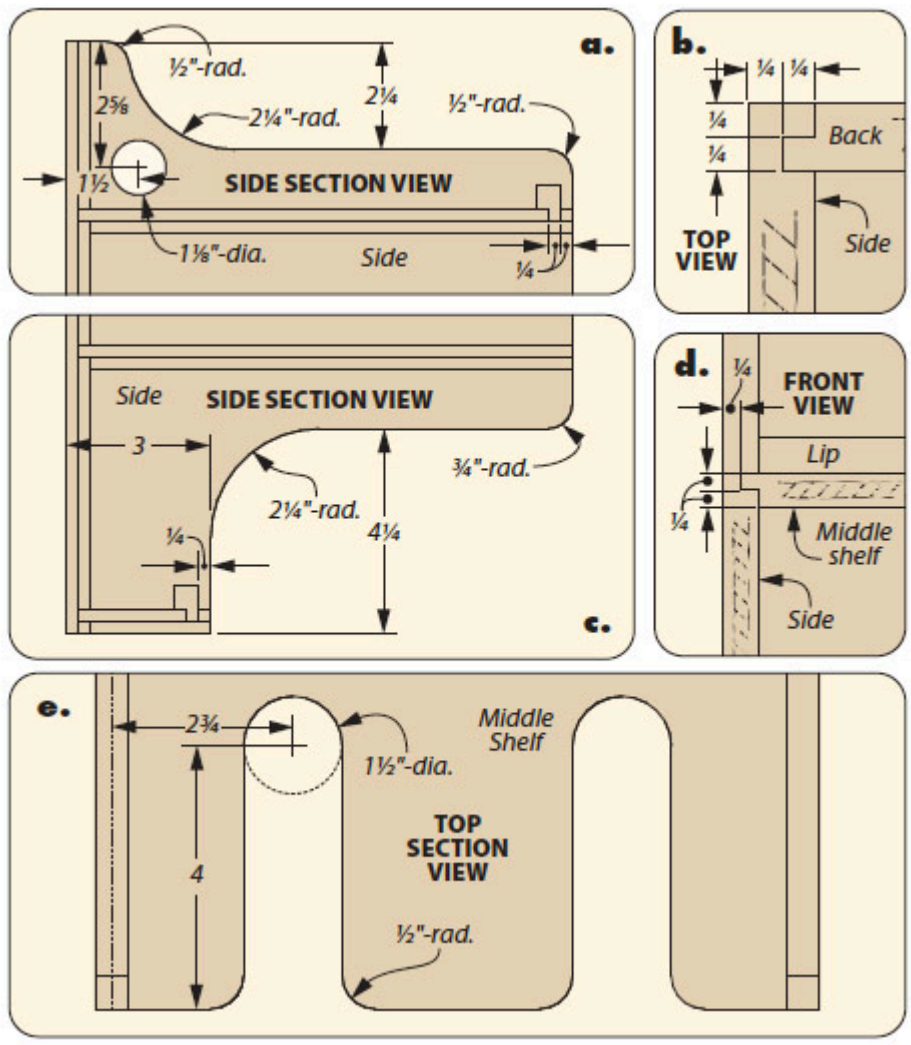

Published in Woodsmith #280

Need something bigger? Get the step-by-step plans to build this full-size cordless tool charging station here at the [Woodsmith Plan Store](#)!

Published: July 14, 2025

Topics: plywood, weekend, woodsmith 280, workshop

©2026 Active Interest Media company